Model: AS-16

6 Position Remote Antenna Switch for 1 radio

- 6 Antennas to 1 Radio
- Frequency range: DC to 54 MHZ
- Impedance: 50 ohm
- Insertion loss: 0.06 dB or better
- Power: 3 kW Peak (SWR < 1.5:1)
  2 kW "Key Down (SWR <1.5:1)
- Control Voltage: 12V DC
- Connectors SO-239

AS-16 VSWR CHART:

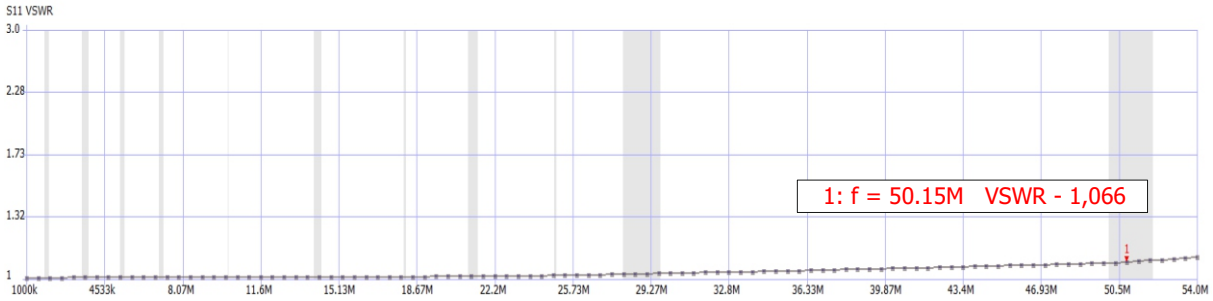

CONNECTION:

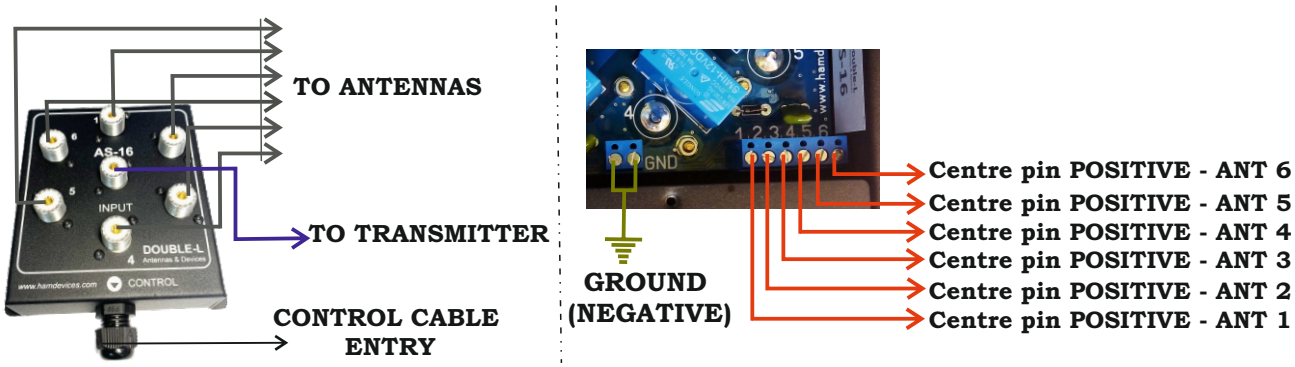

MAX CONTROL VOLTAGE - +14 V

www.hamdevices.com
info@hamdevices.com, Double-L Antennas & Devices, UKRAINE