DL3-R cable wired for Kenwood

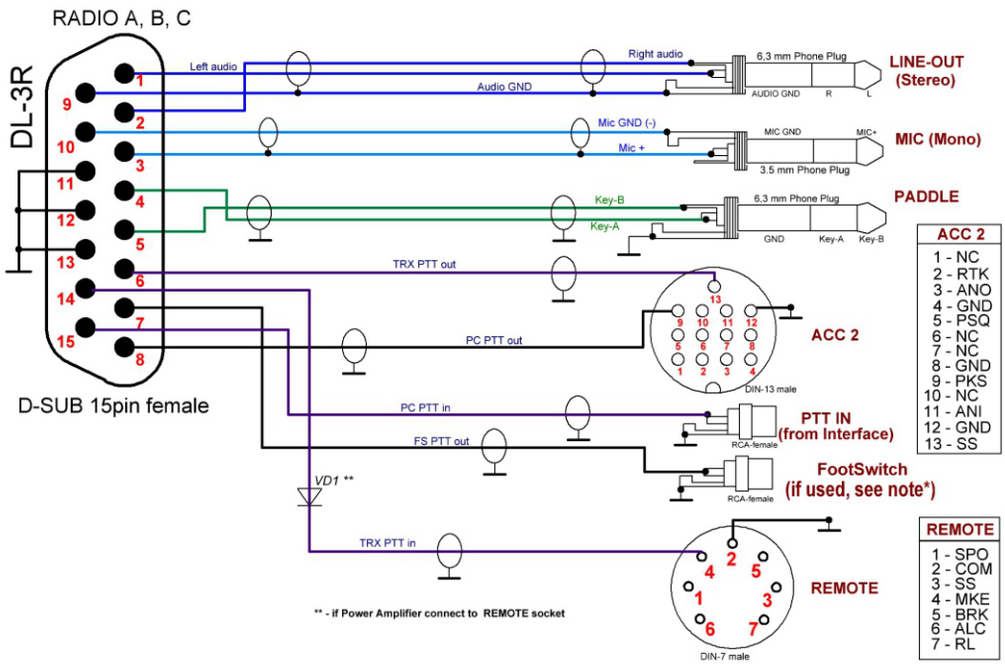

DL3-R cable wired for Kenwood (USB connection)

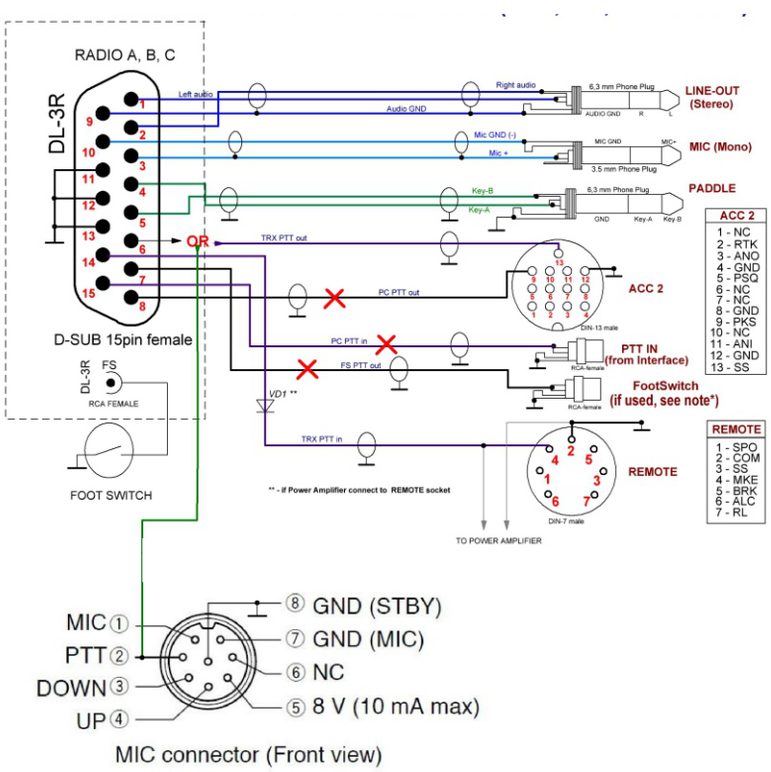

DL3-R cable wired for Elecraft K3

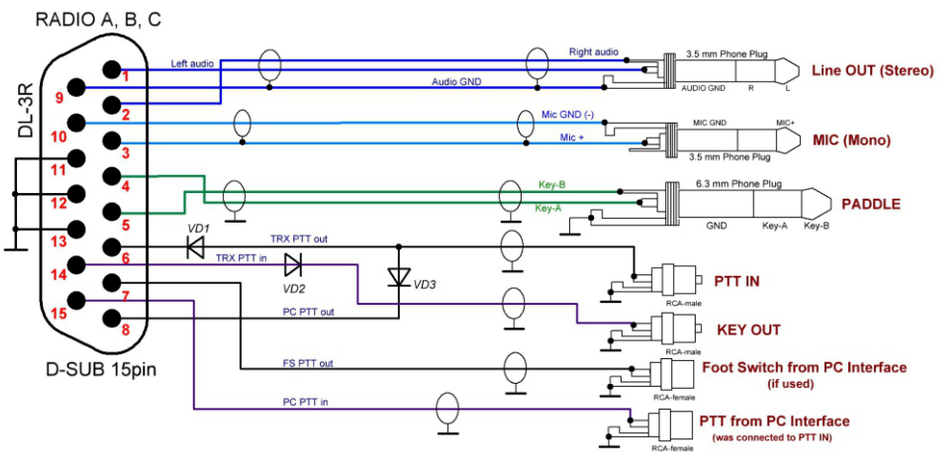

DL3-R cable wired for SunSDR

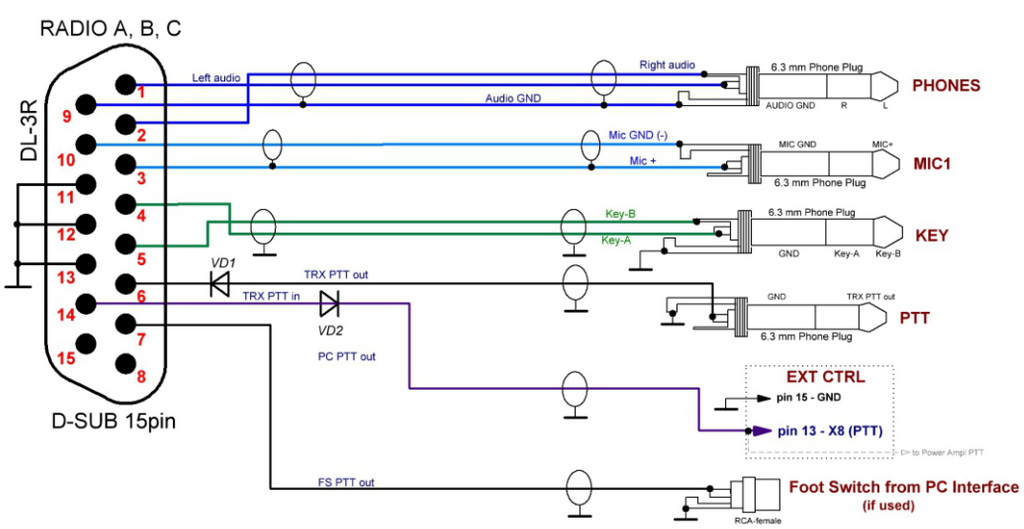

DL3-R cable wired for Yaesu

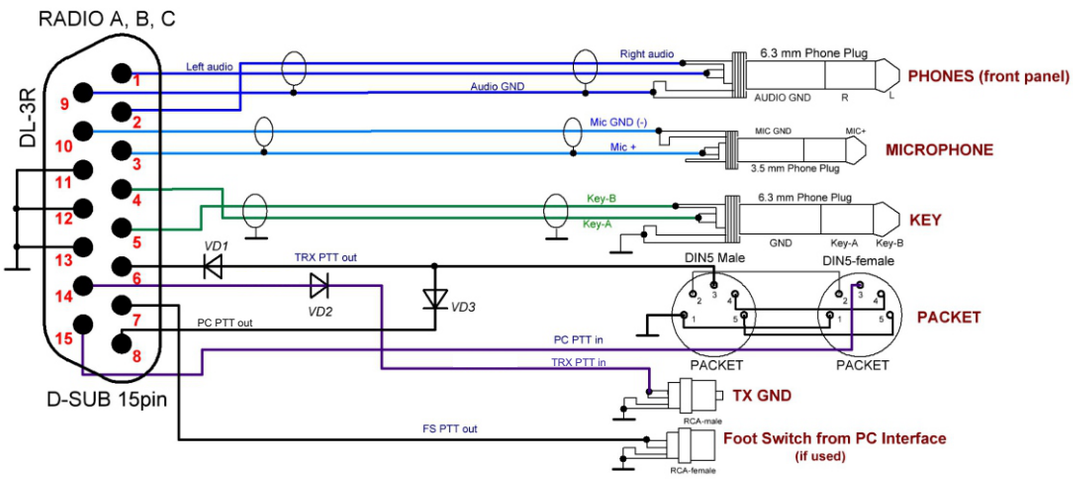
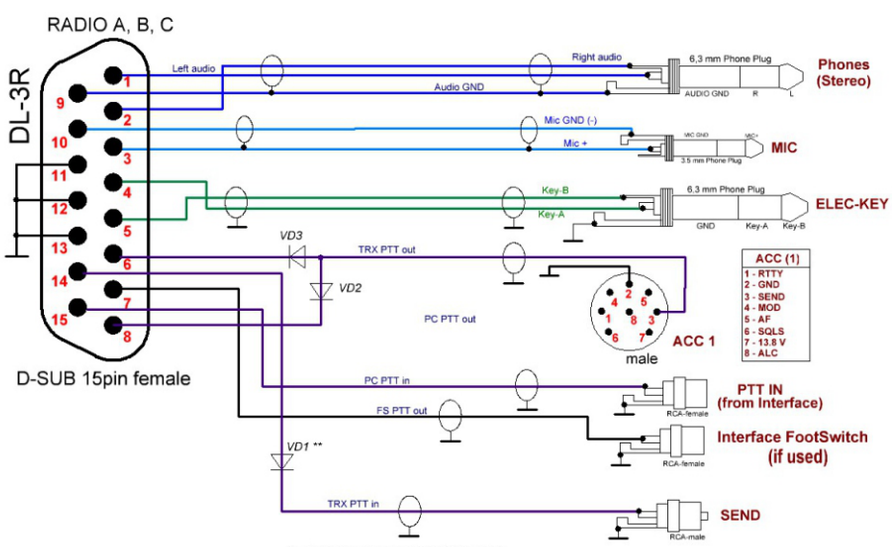
DL3-R cable wired for Icom